TECHNICAL SERVICE BULLETIN

NUMBER	**SD-TSB-010224**			***TYPE***	**INSTALL ALERT**				
ROUTING	INSTALL	X	SERVICE		SALES		PURCH		
TITLE	**TGS02 FORMED FRAME DS/PS FRAME PARTS**								
REV				***ISSUED***	**1/2/2024**		***REVISED***		
MAY AFFECT	**TGS02 SPREADERS SHIPPED BETWEEN 3/3/2023 AND 9/13/2023 WITH FORMED FRAMES (SMALLER 22x18x31 BOX)**								

INFORMATION

Some initial shipments of TGS02 spreaders with the formed frame may have shipped with incorrect parts. The kits should have a Passenger and Driver mount plate. PN's 3055127 and 3055130 shown below. All stock was audited and corrected on 9/13/2023. This only impacts TGS02's in the newer/smaller 22x18x31 boxes.

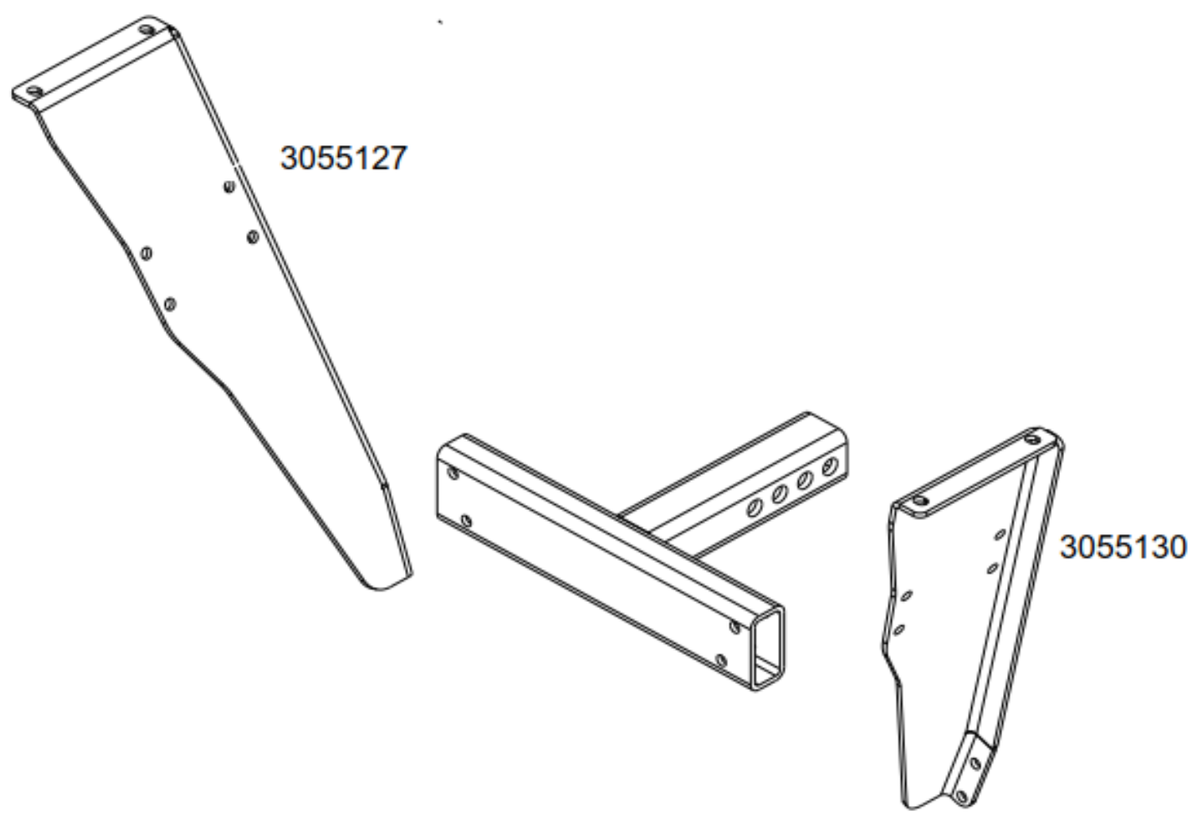

INSTRUCTIONS

Inspect TGS02 stock and contact Customer Service for correct parts as required.

3055127 is the DRIVER SIDE MOUNT
3055130 is the PASSENGER SIDE MOUNT