SaltDogg by Buyers
9049 Tyler Blvd. • Mentor, Ohio 44060
Phone (440) 974-8888 • Fax (440) 974-0165
Toll-Free Fax 800-841-8003 • saltdogg.com

Instruction Manual

Electric 12 VDC Under Tailgate Spreaders

Table of Contents

Warranty Information 1
Spreader Installation Instructions 1,2
Spreader Installation Drawing 2
Spinner Assembly Instructions 3,4
Spinner Assembly Drawing 3,4
Parts list 6-7
Spreader Motor Assembly 8

UNDER TAILGATE SPREADER WARRANTY

This warranty replaces all previous warranties and no employee of this company is authorized to extend any additional warranties, or agreements, or implications not explicitly covered herein. Buyers Products Company warrants all parts of the product to be free from defects in material and workmanship for a period of (1) one year from the date of original installation. Parts must be properly installed and used under normal conditions. Normal wear is excluded.

Any part which has been altered, including modification, misuse, accident, or lack of maintenance will not be considered under this warranty. The sole responsibility of Buyers Products Company under this warranty is limited to repairing or replacing any part(s) which are returned, prepaid, 30 days after such defect is discovered, and returned part(s) are found to be defective by Buyers Products Company.

Authorization from Buyers Products Company must be obtained before returning any part. The following information must accompany defective parts returned to Buyers Products Company: RMA#, spreader model, serial number, date installed, and distributor from whom it was purchased. Buyers Products Company shall not be liable for damage arising out of failure of any unit to operate properly, or failure, or delay in work, or for any consequential damages. No charges for transportation or labor performed on any part will be allowed under this warranty.

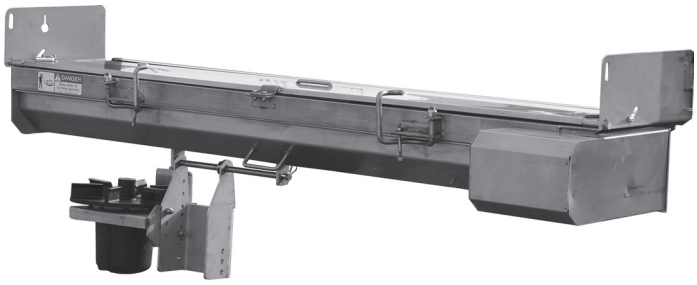

Installation Instructions

NOTE: The left and right end plates may, on occasion, get bent through improper handling during shipment or storage. If this should happen, square and true the left and right end plates before installation.

1. Aligning the spreader:

A. Position the spreader with the truck such that the auger gear motor is located on the right side of the truck (passenger side).

B. Lift the spreader up and under the dump body tailgate, positioning the spreader forward as close as possible to the dump body. The tailgate of the dump body should lay down horizontally over the spreader.

C. Support the spreader solidly and securely when positioning for mounting.

2. Attach mounting brackets: (See Fig. 1.)

A. Attach a quick detach plate, (1) to both sides of the spreader frame using hinge pins (2) and a hairpin cotter pins (5).

B. Position the (2) quick detach plates over the dump body rub rails and flush with rear edge of dump body.

C. Weld the quick detach plates to the dump body rub rails. Weld the plates continuously around 3 sides of each plate. Do not weld along the edge of the plates next to the attachment pin.

—continued inside

Mounting Hardware Installation Drawing

Figure 1

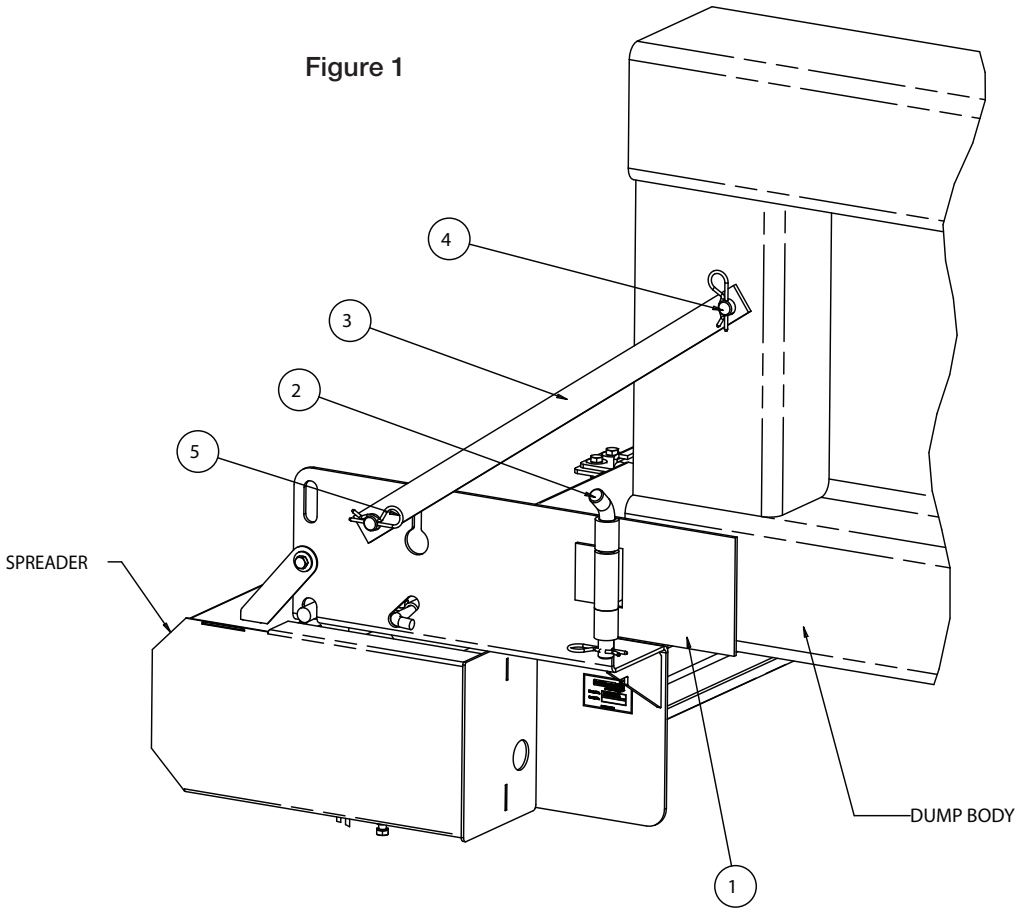

Bill of Materials

ITEM	QTY.	DESCRIPTION	PART NO.
1	2	Quick Detach Plate	**3009526**
2	2	Hinge Pin	**3011139**
3	2	Hanger Iron Brace	**3011137**
4	2	Pin Brace	**3000210**
5	6	Hair Pin Cotter 5/32"	**HP12**

D. Align the pin brace (4) on the dump body using the iron brace (3) for exact positioning. For proper fit, hanger iron brace may require some minor bending.
E. Weld the pin braces (4) to the dump body sides, all around.
F. Attach the iron braces (3) to the pin braces on the sides of the dump body and the sides of the spreader using two hairpin cotter pins (Item 5).
G. If there is a gap between the spreader and the dump body, weld or bolt a steel strip to the forward edge of the spreader to cover the gap.
H. If you have purchased the tailgate side shields (purchased separately as P/N 924F0106), bolt or weld them to the inside of the tailgate to prevent material spillage at the ends of the spreader.

Figure 2

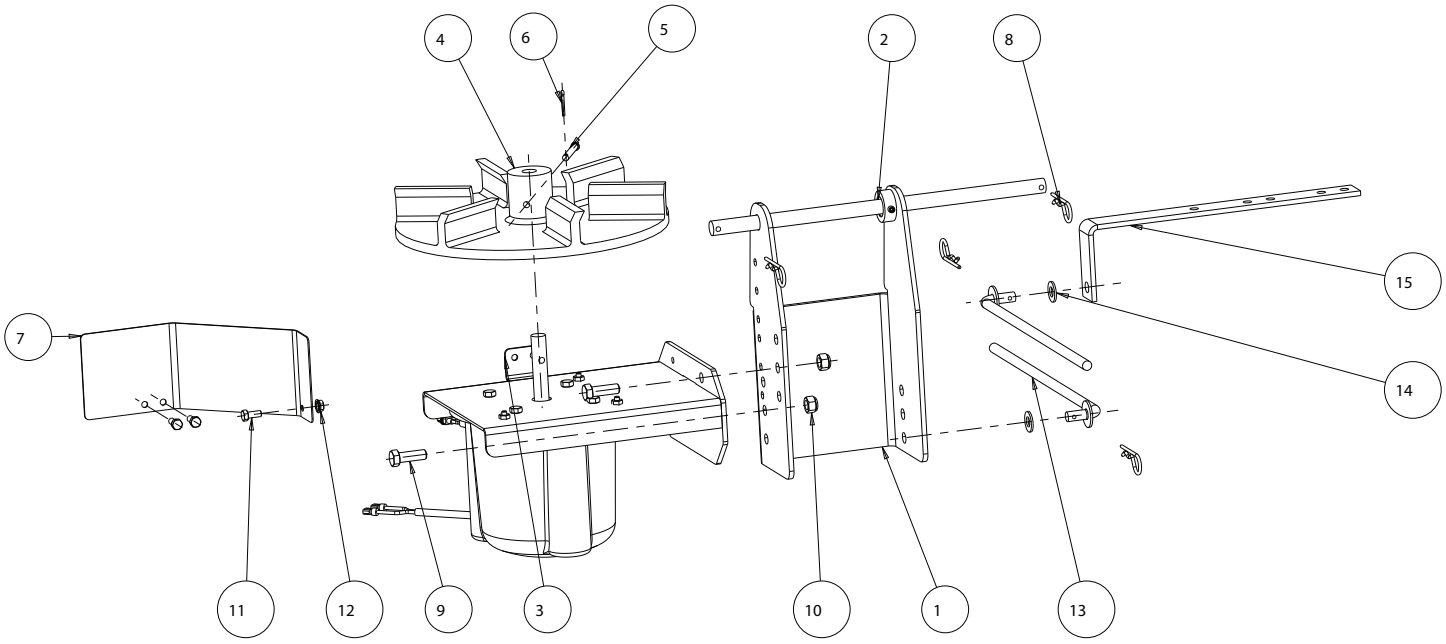

2 Spinner assembly installation:

A. Attach heights adjustment bracket (1) to spreader lower tray using rod hinge (2) and hair pins.

B. Attach spinner motor assembly (3) to heights adjustment bracket (1) using ½-13 screws and nuts.

C. If extra clearance required, use upper holes in heights adjustment bracket.

D. Attach spinner shield (7) to heights adjustment bracket (1) using 5/16-18 screws and nuts.

E. Attach spinner disk (4) to motor shaft using clevis pin and cotter pin.

Bill of Materials

ITEM	QTY.	DESCRIPTION	PART NO.
1	1	Bracket Heights Adj. Weldment	**3017175**
2	1	Rod, Hinge	**3006646**
3	1	Bracket Spinner Motor Assembly	**3017176**
4	1	Spinner, 14" Poly CCW	**3016394**
5	1	Pin, Clevis, 5/16 x 2-1/2, .141 Hole ZN	**3007113**
6	1	Cotter Pin, 1/8 x 1, Zinc	**FPC0130001000**
7	1	Shield Spinner Disk	**3017172**
8	4	Pin, Hair Cotter 5/32" ZN 3.25 OAL	**HP12**
9	2	Screw, HHC 1/2-13x1.50 SST	**FCS05001350SS**
10	2	Nut, Nylock 1/2-13 Zinc	FNE050013053SS
11	3	Screw, Hex HD, 5/16-18 x 3/4 GR5 SS	**3006721**
12	3	Nut, Hex Flange - 5/16-18 SS	**3006719**
13	2	Weldment, Parallel Linkage	**924F0012**
14	2	Washer, Flat 1/2 ID SST	**3003873**
15	1	Angle, Spinner Lug	**3006645**

Figure 3

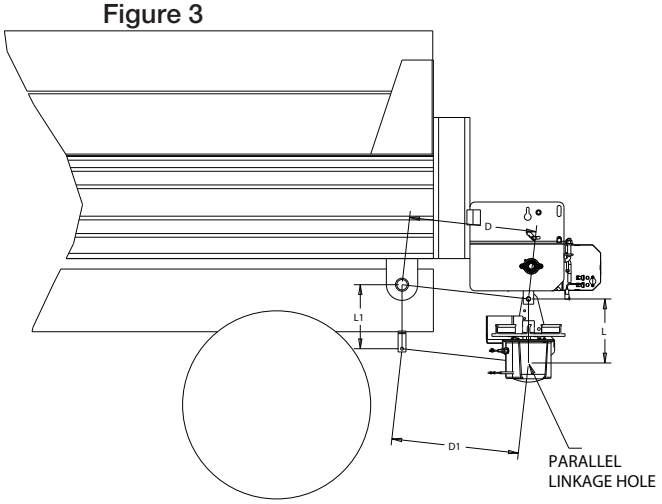

Figure 4

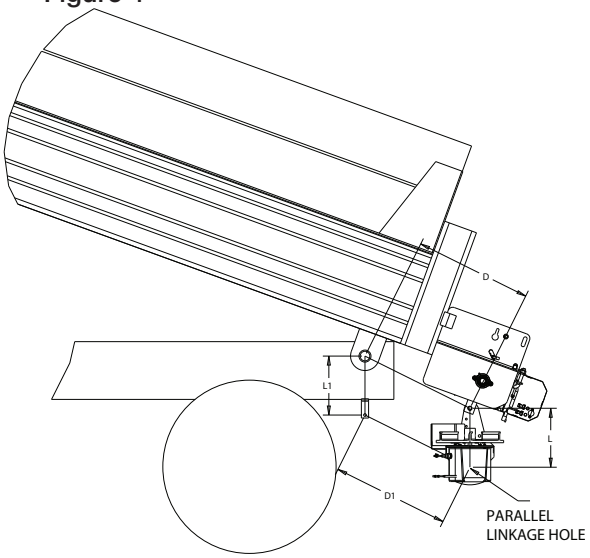

F. The leveling mechanism may now be mounted. Park truck on flat, level surface. With spinner assembly in level position, carefully measure "L" and "D" distances. Use any of 3 available holes in heights adjustment bracket. Locate angle (15) such that ½" hole will position with D1=D and L1=L. Modify angle if necessary.

G. Secure angle (15) to the truck frame.

H. Attach parallel linkage rods (13) to heights adjustment bracket and angle. Secure them using ½" washers and hair pins.

I. Clamp parallel linkage rods together. To verify leveling action, slowly raise the dump. Be sure that spinner motor assembly and linkages do not have any interference with truck body and it does not have contact with the road. After checking weld parallel linkage bars together.

J. Keeping the spinner assembly level, secure the spinner frame in place using the set screw or 5/16-18 hex screw.

3. Control Box & Vehicle Wiring Harness Installation

MAKE SURE YOU HAVE CONNECTED THE PROPER WIRE COLOR. THIS IS WIRE GROUND ELECTRICAL SYSTEM! NO CONNECTIONS TO TRUCK'S FRAME OR BODY ALLOWED!

⚠ WARNING

WARNING! Do not drill holes into fuel tanks, fuel lines, through electrical wiring, etc that may be damaged by drilling. To insure good performance of your spreader, check the condition of truck's electrical system. Using digital voltmeter, check alternator and battery voltage. With engine running and head lights and heater fan ON good voltage reading should fall between 13.0 and 15.3 volts. If voltage reading falls out of this range, check and adjust your electric system.

NOTE: Always disconnect battery before attempting to install electrical components on your vehicle.

A. Mount the controller in a convenient location in the truck cab. It is recommended not to mount the controller directly in front of heat vents. Allow ample air space around controller.

⚠ CAUTION

DO NOT MOUNT CONTROLLER IN THE WAY OF AIR BAG DEPLOYMENT!

B. Route both wire harnesses into truck cab through firewall (it maybe necessary to drill holes). Insulate hole to avoid water leaks.

C. Insure no wires are nicked or damaged during installation.

D. Connect the 4-pin connector on the wire harness to the control box 4-pin connector.

E. Connect the 2-pin connector on the power cable to the control box mating connector.

F. Connect wire harness single connectors to control box connectors.

G. Connect fuse connector to the fuse terminal or ignition switch (5 AMP max).

H. Lay out a path for the power cable to the battery, use quick ties to secure power cable.

DO NOT CONNECT TO BATTERY AT THIS TIME!

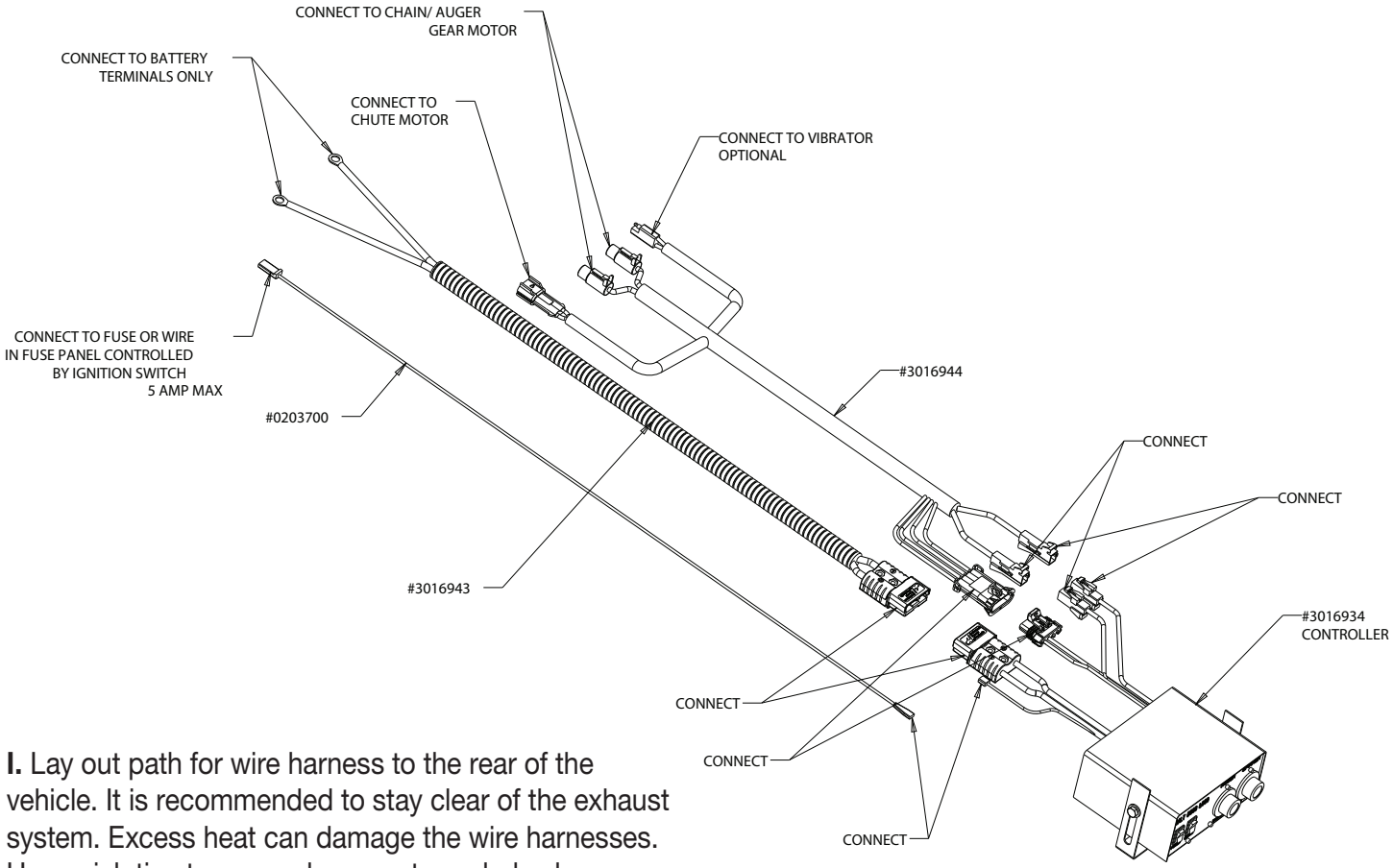

I. Lay out path for wire harness to the rear of the vehicle. It is recommended to stay clear of the exhaust system. Excess heat can damage the wire harnesses. Use quick ties to secure harness to underbody.

J. Connect the wire harness to the motor. Make sure wire colors on wire harness match colors on the motor. Thoroughly clean battery terminals. Make sure battery terminals have no tarnish or corrosion. DO NOT CONNECT WIRE HARNESS TO DAMAGED OR CORRODED TERMINALS!
IT MAY RESULT IN OVERHEATING, LOST POWER AND POTENTIAL CONTROLLER DAMAGE!

K. Connect the power cable directly to the battery.

L. Insure all functions of the controller are working properly.

M. Observe auger moving in proper direction. If direction is wrong reverse wires between Motor and Wire Harness.

N. Optional spot light (5 AMP max) can be installed on spreader. Remove cap from single white wire. Connect light to this wire and trucks frame.

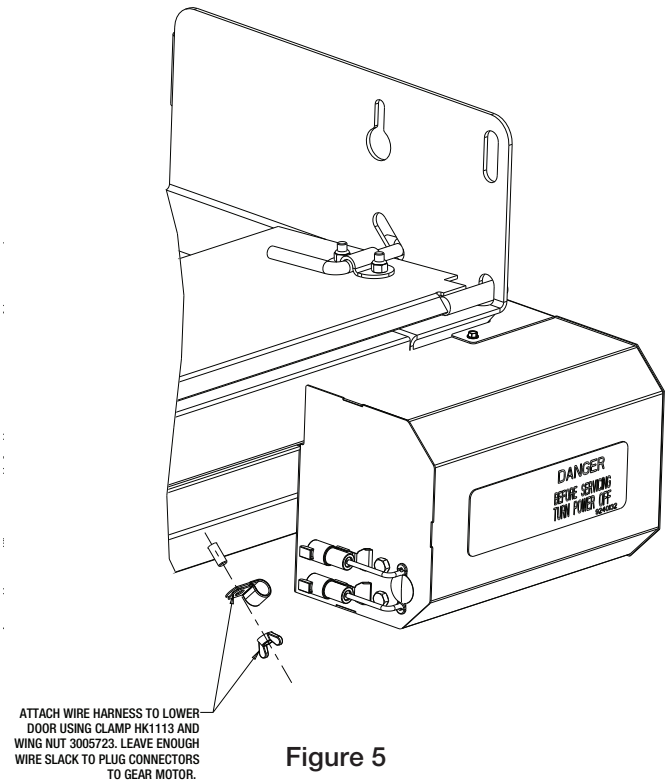

Figure 5

⚠ IMPORTANT

IMPORTANT Make sure all wires securely attached to vehicle or spreader. Use wire ties and/or wire clamps to attach wires. All excess wires must be rolled into bungles and attached to vehicle or spreader.

Spreader Assembly Parts List

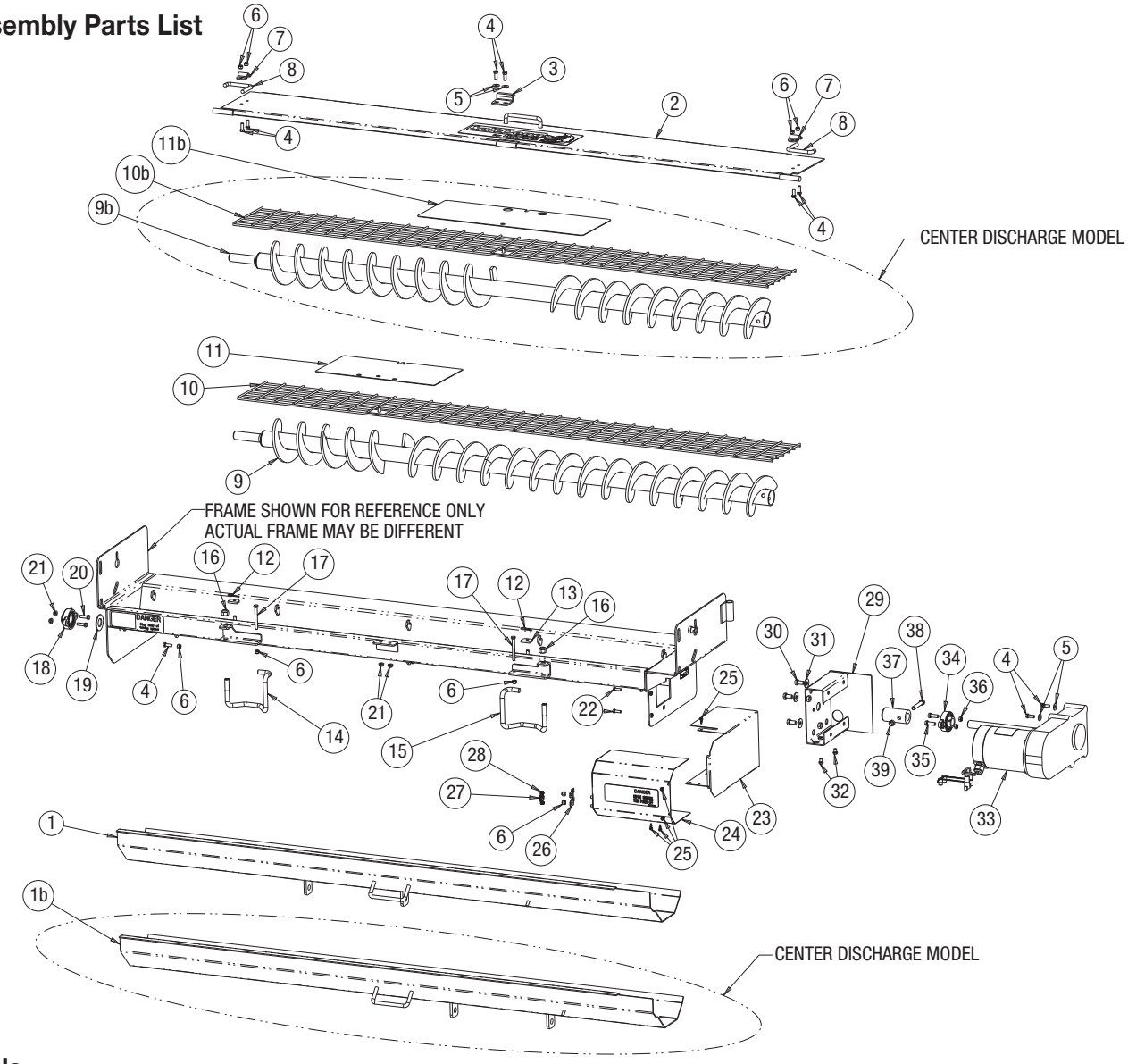

Bill of Materials

ITEM	QTY.	DESCRIPTION	PART NO
1	1	Bottom Tray - Standard Discharge	3024301
1b	1	Bottom Tray - Center Discharge	3024515
2	1	Top Cover	3025122
3	1	Bracket, Cover Mount	3008447
4	8	Screw,Hex Head Cap, 3/8-16 X 1 SST	FCS038016100SS
5	6	Washer,Flat, 3/8in SST	FWF038100007SS
6	11	Nut,Nylon Locking, 3/8-16 SST	FNE038016044SS
7	2	Bracket, Cover Latch	3006968
8	2	Latch Handle	3000268
9	1	Auger - Standard Discharge	924F0081
9b	1	Auger - Center Discharge	3024512
10	1	Screen - Standard Discharge	3024306
10b	1	Screen - Center Discharge	3024518
11	1	Plate,Anti-Spill - Standard Discharge	3022531
11b	1	Plate,Anti-Spill - Center Discharge	3024517
12	3	Hairpin Cotter	1420016
13	2	Bracket,Screen Mount	3022533
14	1	Cam Handle - CW	3027109
15	1	Cam Handle - CCW	3027110
16	2	Nut,Nylon Locking 5/8-11 SST	3001247
17	2	Screw,Hex Head Cap, 3/8-16 x 3.5 SST	3001249
18	1	Bearing,1-1/4 Flange 2 Hole	9240086

ITEM	QTY.	DESCRIPTION	PART NO
19	1	Gasket,Felt Bearing	9240087
20	2	Screw,Hex Head Cap, 3/8-16 X 1.25 SST	FCS038016125SS
21	4	Nut,Hex Flange,3/8-16 SST	3001255
22	2	Screw, Hex Head Cap, 5/16-18 X 1 SST	3018701
23	1	Cover,Gear Motor,Side	3017186
24	1	Cover,Gear Motor,Front	3017187
25	5	Screw,Hex Head Washer,Self Drill #12-14 x .75 SST	3015873
26	2	Bracket,Receptacle SZ8 Deutsch	3017121
27	1	Plug,1.0" Dome,Heyco 1702	3017483
28	2	Bushing,Strain Relief,Heyco 2867	3017982
29	1	Adapter,Gear Motor,Weldment	3014455
30	3	Screw,Hex Head Cap, 1/2-13 X 1 SST	FCS050013100SS
31	3	Washer,Flat,1/2 SST	3000269
32	2	Screw,Hex Head Cap, 3/8-16 X 1/2 SST	3006760
33	1	Gear Motor	3013821
34	1	Bearing,1-1/8 Flange	1410200
35	2	Screw,Hex Head Cap, 7/16-14 X 1.25 SST	3014755
36	2	Nut,Nylon Locking, 7/16-14 SST	3014756
37	1	Sleeve,Auger Adapter	3014858
38	1	Screw,Hex Head Cap, 1/2-13 X 3 SST	3001250
39	1	Nut,Nylon Locking 1/2-13 SST	FNE050013053SS

Hardware Box Parts List - Part No. 3015145

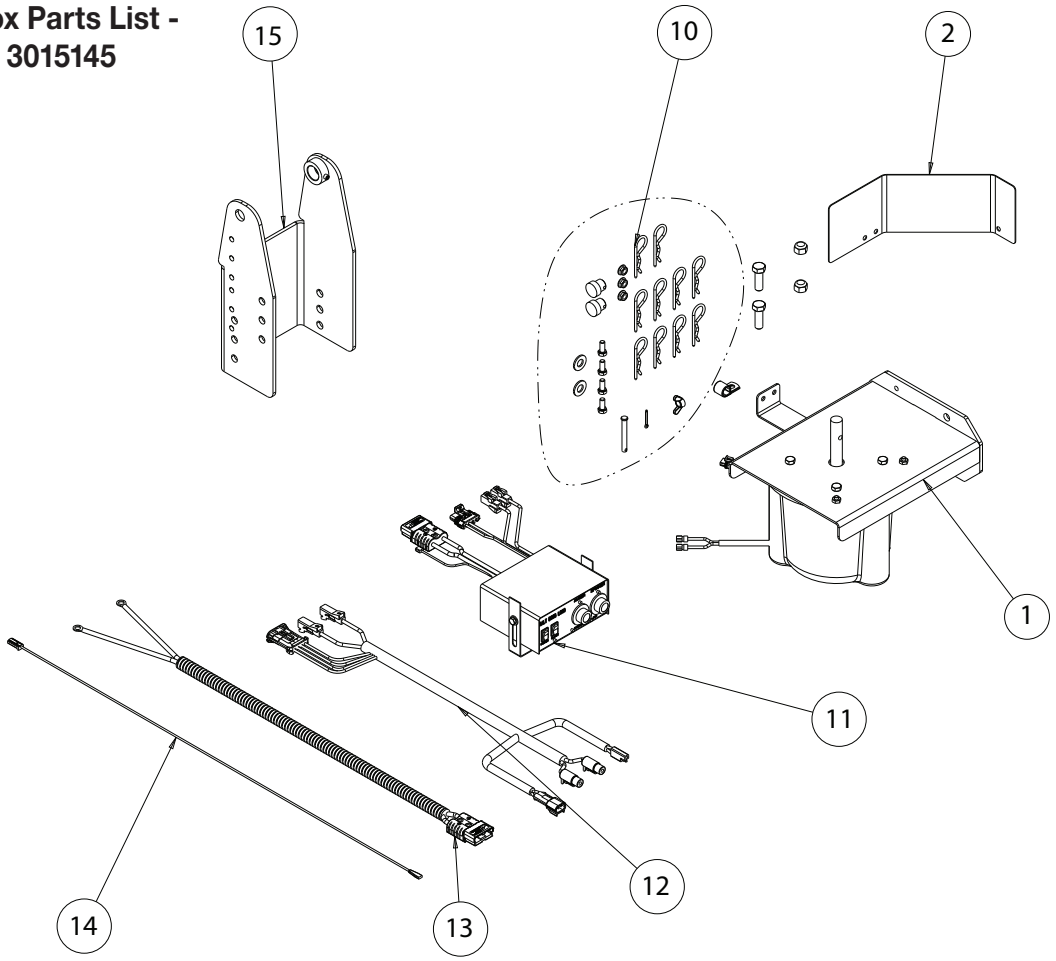

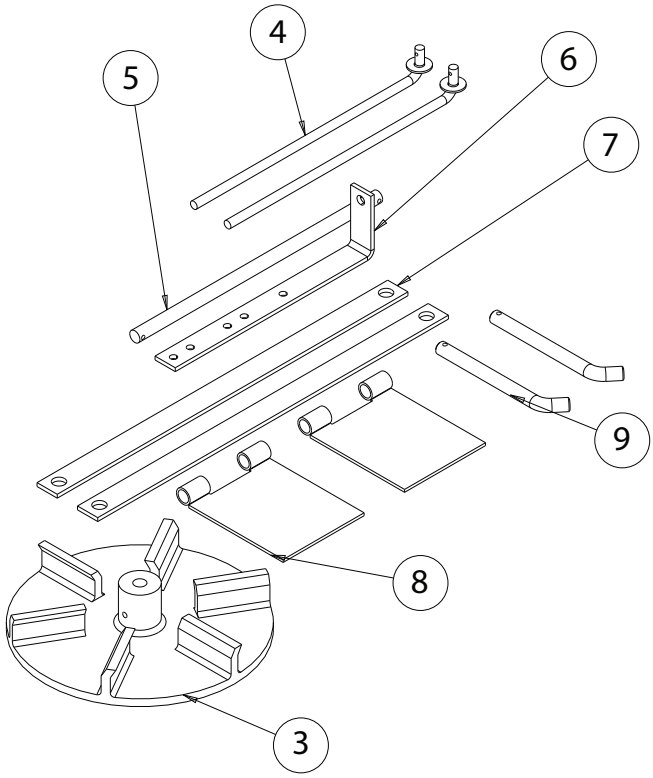

Bill of Materials

ITEM	QTY.	DESCRIPTION	PART NO.
1	1	Bracket Spinner Motor Assy.	**3017176**
2	1	Spinner Shield Disk	**3017172**
3	1	Spinner, 14" Poly CCW	**3016394**
4	2	Weldment, Parallel Linkage	**924F0012**
5	1	Rod, Hinge	**3006646**
6	1	Angle, Spinner Lug	**3006645**
7	2	Bracket, Hanger, UTS SST	**3011137**
8	2	Plate, Detach, Mount SST	**3009526**
9	2	Pin, Hinge, SST	**3011139**
10	1	Hardware Bag, UTS Electro	**3015181**
11	1	Controller Speed 12 VDC, 60 AMP	**3016934**
12	1	Wire Harness, Main	**3016944**
13	1	Power Cord	**3016943**
14	1	Wire Assembly, 36 Long	**0203700**
15	1	Bracket Heights Adj. Weldment	**3017175**

SaltDogg by Buyers
9049 Tyler Blvd. • Mentor, Ohio 44060
Phone (440) 974-8888 • Fax (440) 974-0165
Toll-Free Fax 800-841-8003 • saltdogg.com

Spreader Motor Assembly

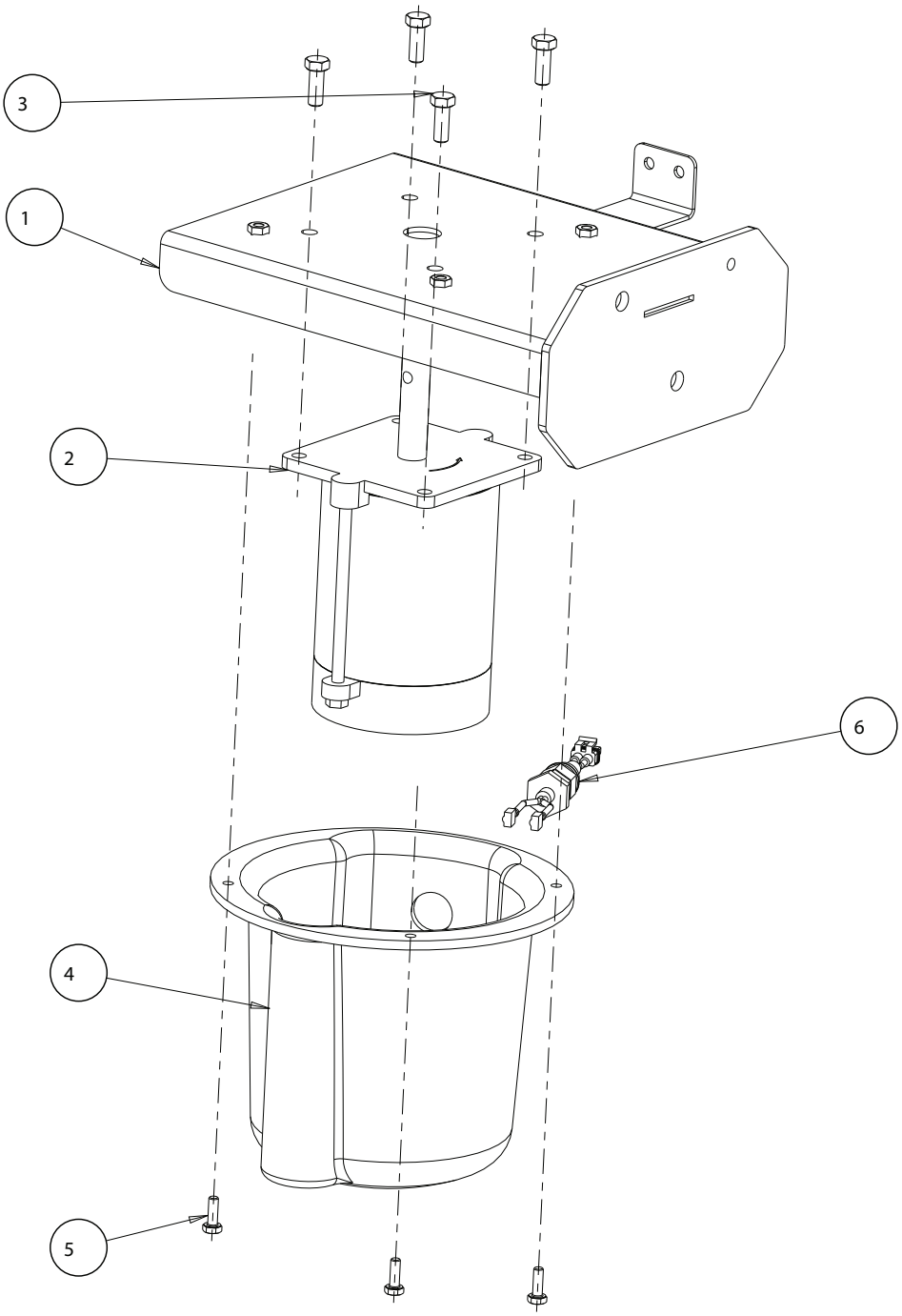

Bill of Materials

ITEM	QTY.	DESCRIPTION	PART NO.
1	1	Bracket Weldment, Spinner Motor	3017171
2	1	Motor 12 VDC, .5 HP Spinner	3016309
3	4	Screw, HHC 3/8-16 x 1 304 SST	FCS038016100SS
4	1	Cover, Motor, Drilled	3017174
5	3	Screw, Cap 1/4-20 x 3/4 SST	FCS025020075SS
6	1	Wire Harness, Chute	3006753